REV.	DATE	REVISIONS DESCRIPTION	REV. BY:

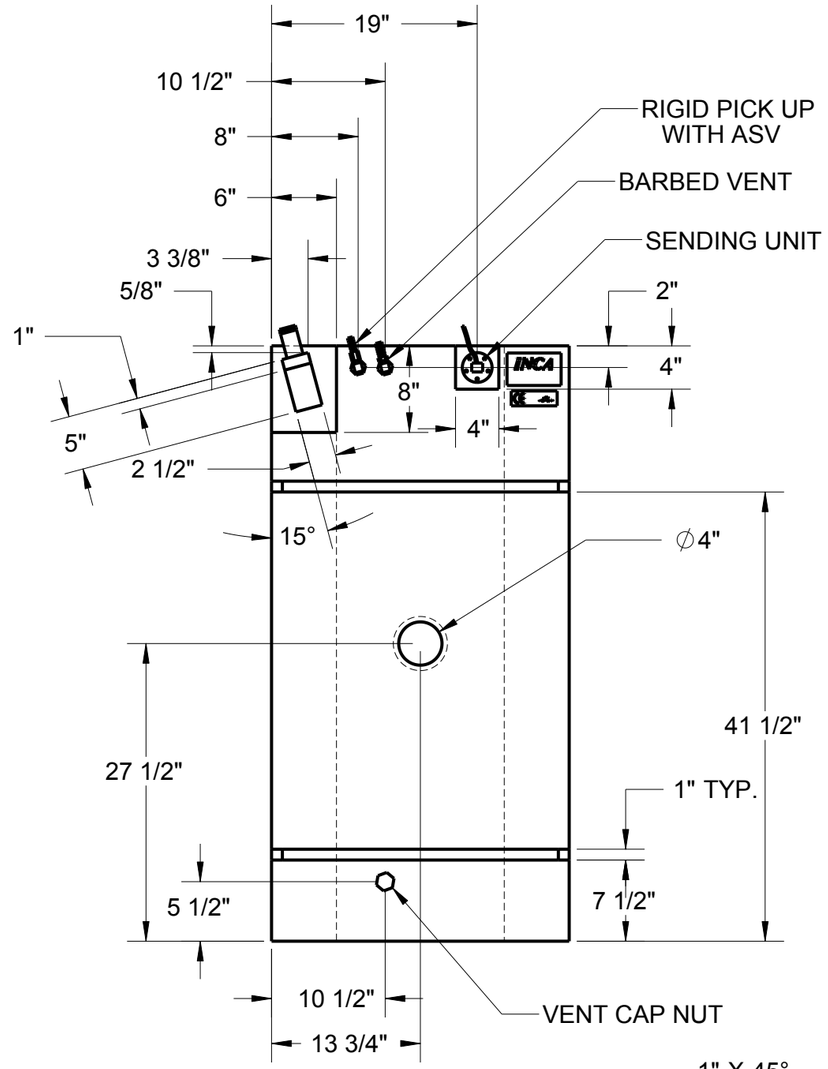

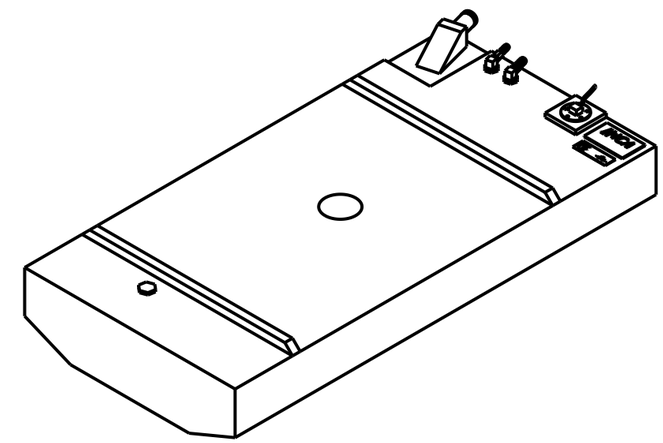

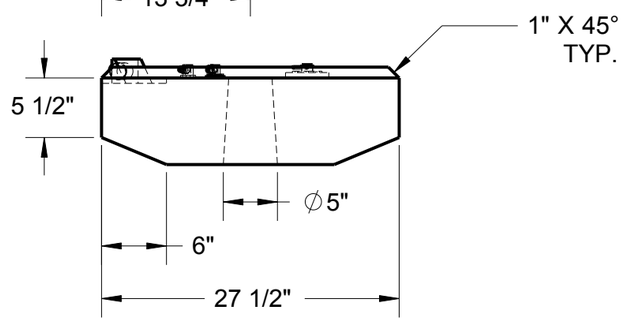

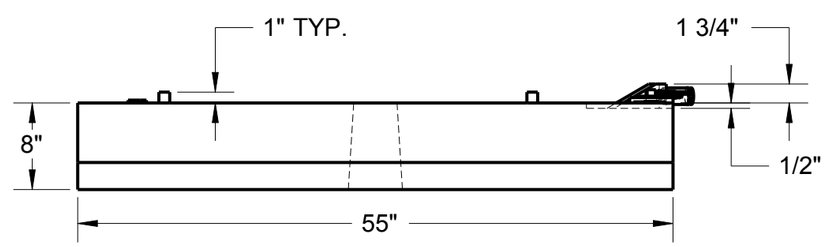

NOTE: PLASTIC FUEL TANKS MUST HAVE SPACE IN TANK COMPARTMENT TO EXPAND 2% FREELY IN ALL DIRECTIONS (LENGTH, WIDTH AND HEIGHT).

UNLESS NOTED OTHERWISE:
1) All dimensions in inches
2) All corner radii to be 3/8"

MAT'L: Polyethylene, Crosslink, Natural
WALL THICKNESS: .225 **in. (nominal)**

INCA MOLDED PRODUCTS, INC.

INCA MOLDED PRODUCTS, INC.
6400 LOUISIANA AVENUE
NASHVILLE, TN 37209 USA
(615) 350-7290

FUEL TANK, 44 GAL.

SHEET	1 of 1	
REV. DATE:		
CHECKED BY:		
DRAWN BY:	6/5/06	BR

Copyright by Inca Molded Products, Inc.
Nashville, TN 37209 USA

SCALE:

REVISION: A

FO4430IV