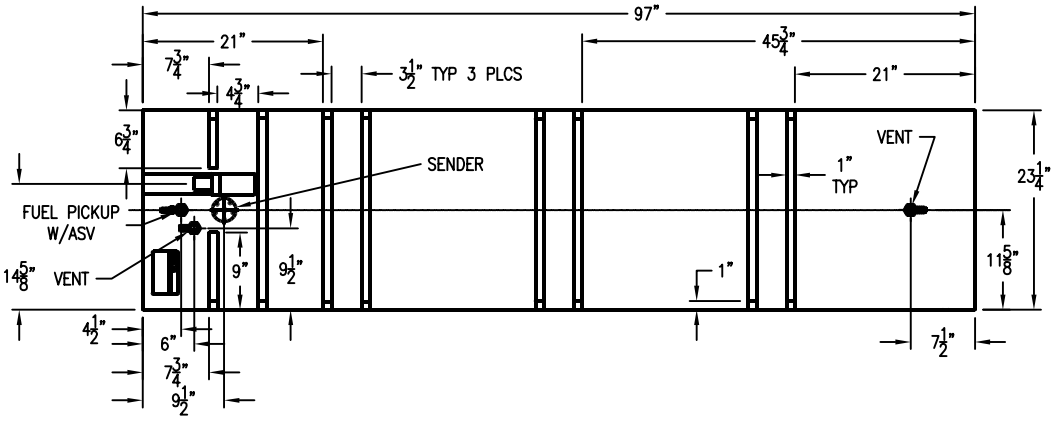

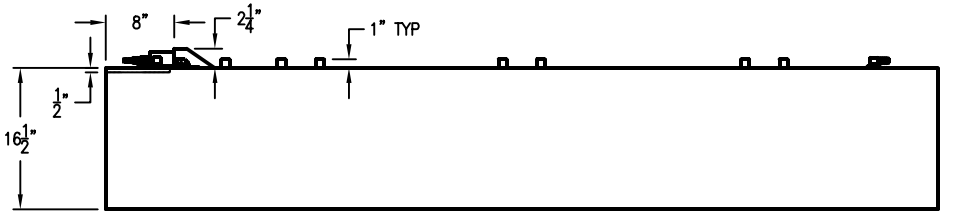

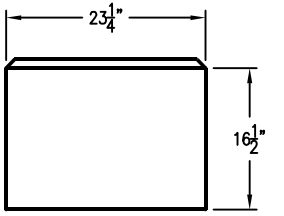

INCA MOLDED PRODUCTS
6400 LOUISIANA AVE.
NASHVILLE, TENNESSEE 37209

F015002

NOTES:

PLASTIC FUEL TANKS MUST HAVE SPACE IN TANK COMPARTMENT TO EXPAND 2% IN ALL DIRECTIONS (LENGTH, WIDTH, HEIGHT).