| REV. | DATE | REVISIONS DESCRIPTION | REV. BY: |
|---|---|---|---|
| | | | |

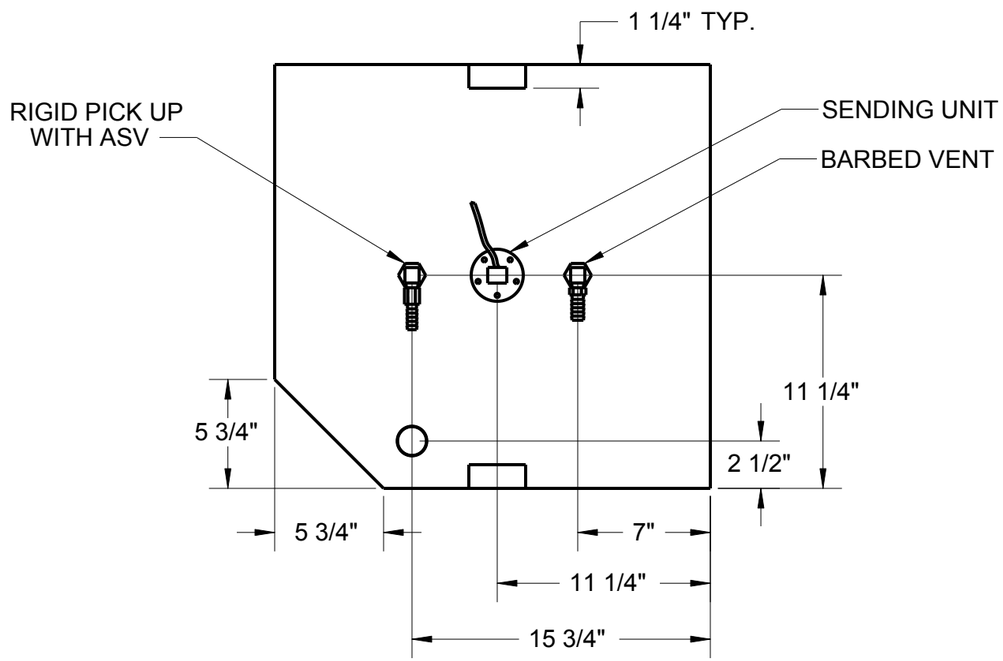


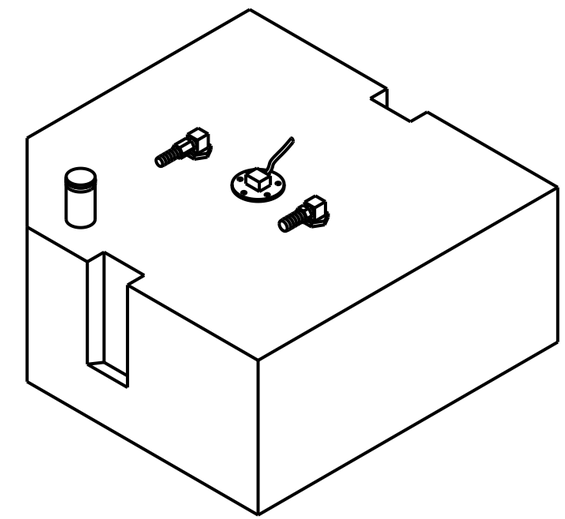

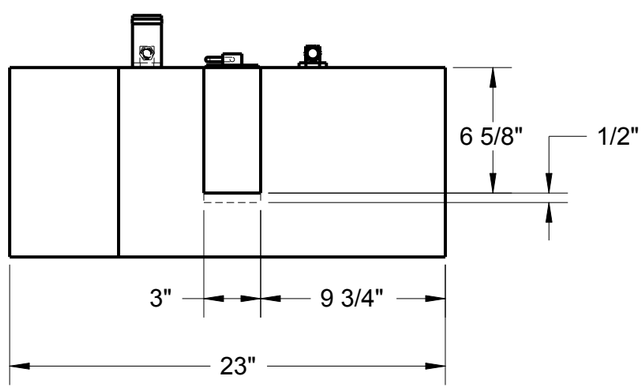


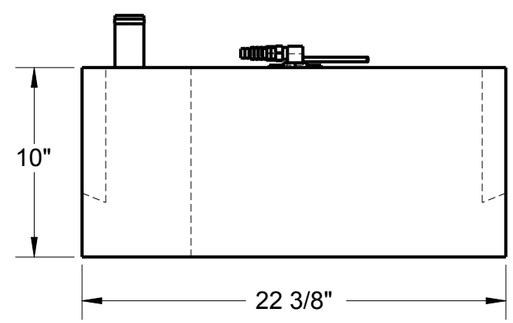


NOTE: PLASTIC FUEL TANKS MUST HAVE SPACE IN TANK COMPARTMENT TO EXPAND 2% FREELY IN ALL DIRECTIONS (LENGTH, WIDTH AND HEIGHT).

UNLESS NOTED OTHERWISE:
1) All dimensions in inches
2) All corner radii to be 3/8"

**MAT'L:** Polyethylene, Crosslink, Natural
**WALL THICKNESS:** .210 **in. (nominal)**

INCA
MOLDED PRODUCTS, INC.

INCA MOLDED PRODUCTS, INC.
6400 LOUISIANA AVENUE
NASHVILLE, TN 37209 USA
(615) 350-7290

# FUEL TANK, 22 GAL.

| | | |
|---|---|---|
| SHEET | 1 of 1 | |
| REV. DATE: | | |
| CHECKED BY: | | |
| DRAWN BY: | 7/5/06 | BR |

Copyright by Inca Molded Products, Inc.
Nashville, TN 37209 USA

SCALE:

REVISION: A

FO2246